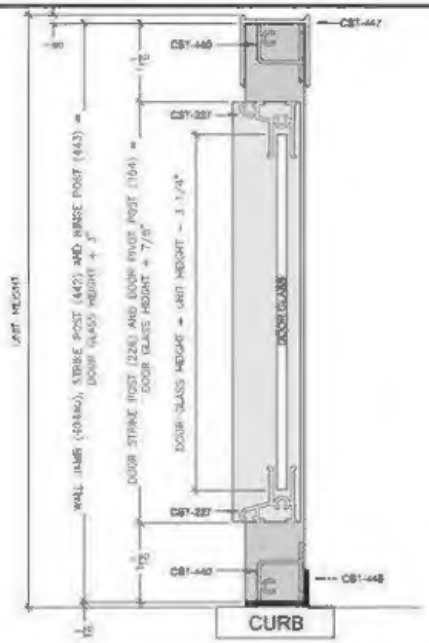

Legend Door
vertical cross section

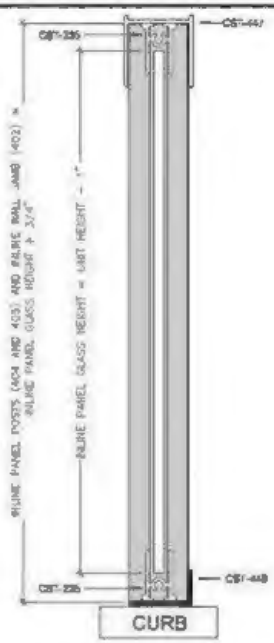

Legend Inline Panel
vertical cross section

NOTES:

1. FORMULAS ARE BASED ON A MINIMUM WIDTH OPENING. WHEN MEASURING OPENING WIDTHS, ALWAYS CHECK FOR OUT OF PLUMB WALL CONDITIONS.
2. STANDARD DOOR WIDTH ADJUSTMENT IS (+) 1-1/2 INCHES *** THE ADJUSTMENT IS GAINED BY ADJUSTING VERTICAL POST WITHIN VERTICAL POST IN LOCATIONS REFERENCING THIS NOTE (SEE HORIZONTAL CROSS VIEW).

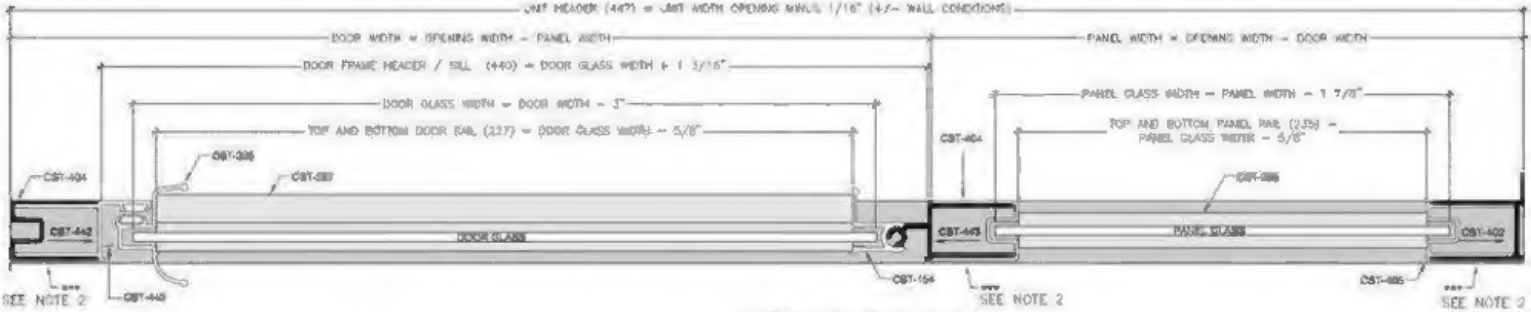

horizontal cross section

Series	Unit Configuration
LEGEND	Door (hinged) w/ 1 Inline Panel

Coastal Industries Inc.